Make: HYUNDAI

Model: i20 II

Part Number: ADB32493

Vehicle Manufacturing/Engine:

ADB32493

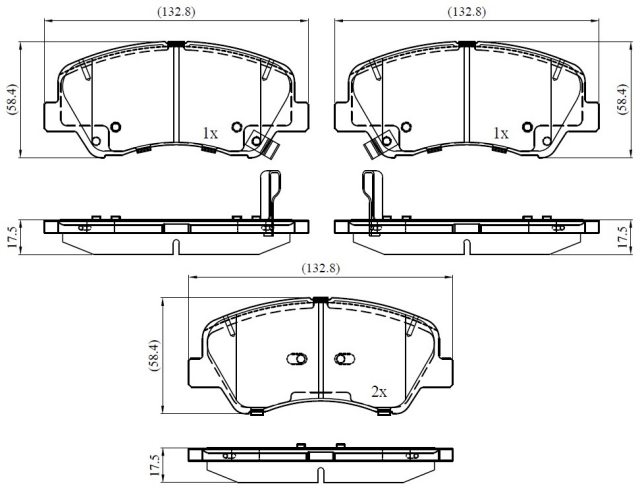

Specifications

Fitting Position	:	Front
Model Date	:	2014-

Or. Caliper	:	
WVA	:	
FMSI	:	
Length	:	132.8
Width	:	94.8
Thickness	:	20