Make: HYUNDAI

Model: i30

Part Number: ADB32408

Vehicle Manufacturing/Engine:

ADB32408

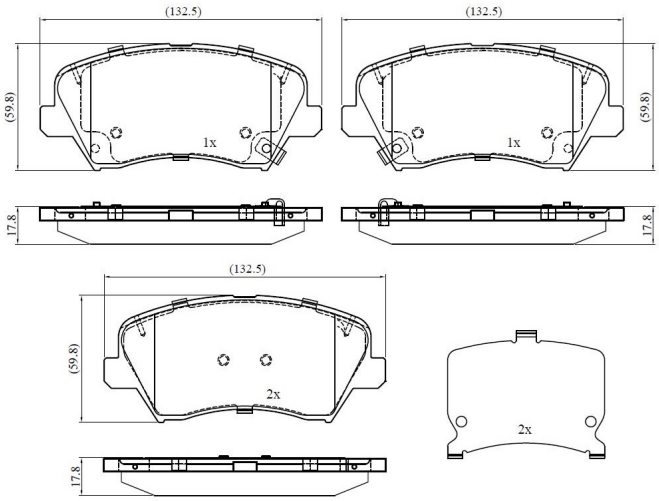

Specifications

Fitting Position	:	Front
Model Date	:	2011-2016
Or. Caliper	:	

WVA	:	21532
FMSI	:	
Length	:	132.8
Width	:	59.8
Thickness	:	17.8