Make: HYUNDAI

Model: PONY / EXCEL Saloon

Part Number: ADB33223

Vehicle Manufacturing/Engine:

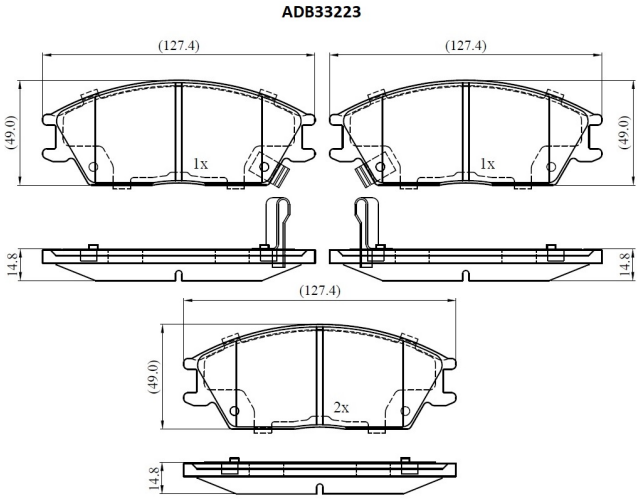

Specifications

Fitting Position	:	Front
Model Date	:	1990-1995
Or. Caliper	:	

WVA	:	21012
FMSI	:	
Length	:	127.4
Width	:	49
Thickness	:	14.8