## Make: HYUNDAI

## Model: SANTA FE IV

## Part Number: ADB33297

## Vehicle Manufacturing/Engine:

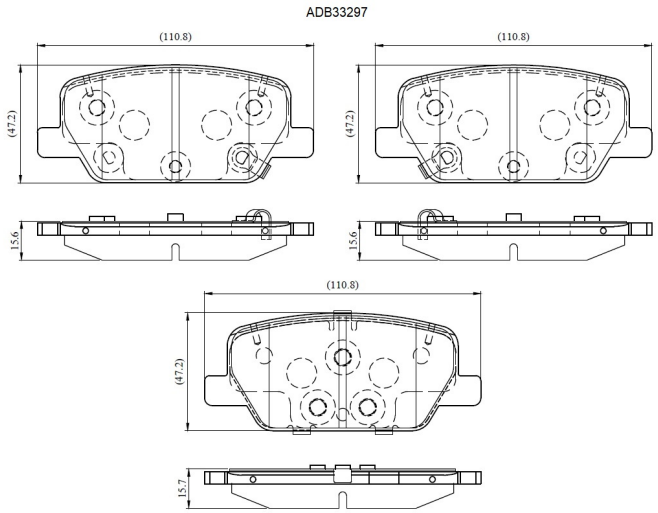


### Specifications

| | | |
|---|---|---|
| **Fitting Position** | : | Rear |
| **Model Date** | : | 2018- |
| **Or. Caliper** | : | |

| | | |
|---|---|---|
| **WVA** | : | 26,14,32,61,42,26,144 |
| **FMSI** | : | |
| **Length** | : | 110.8 |
| **Width** | : | 47.2 |
| **Thickness** | : | 15 |