Make: HYUNDAI

Model: SANTA FE IV

Part Number: ADB33297

Vehicle Manufacturing/Engine:

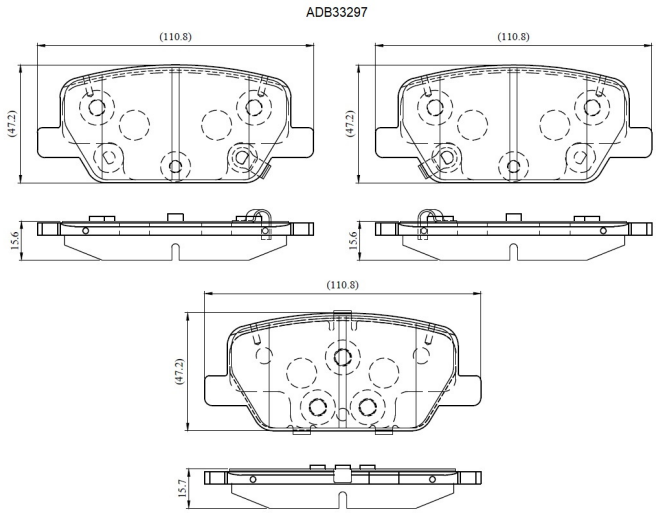

Specifications

Fitting Position	:	Rear
Model Date	:	2018-
Or. Caliper	:	

WVA	:	26,14,32,61,42,26,144
FMSI	:	
Length	:	110.8
Width	:	47.2
Thickness	:	15