Make: HYUNDAI

Model: Tucson

Part Number: ADB32530

Vehicle Manufacturing/Engine:

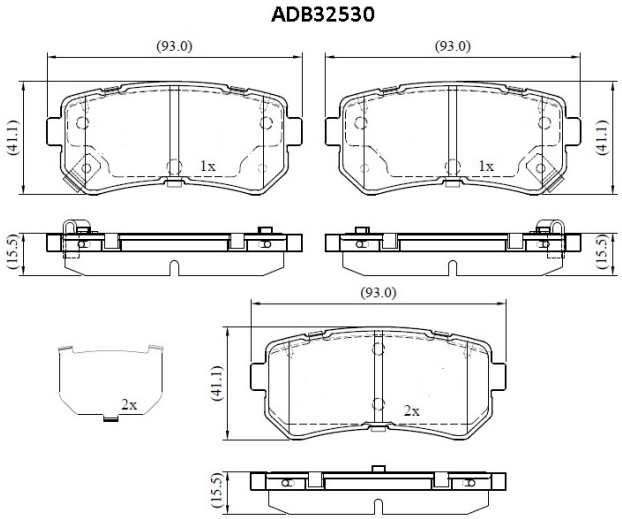

Specifications

Fitting Position	:	Rear
Model Date	:	2019-
Or. Caliper	:	

WVA	:	2,43,20,25,292
FMSI	:	
Length	:	93.1
Width	:	41
Thickness	:	15.5