Make: IKCO

Model: Runna

Part Number: ADB32292

Vehicle Manufacturing/Engine:

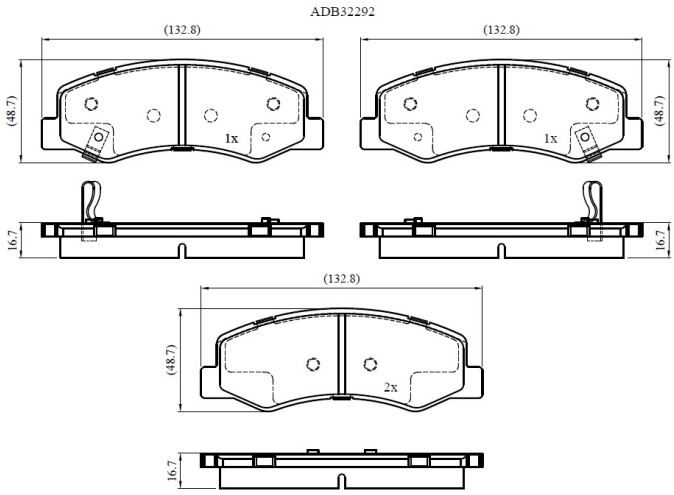

Specifications

Fitting Position	:	Front
Model Date	:	2011-
Or. Caliper	:	
WVA	:	

FMSI	:	
Length	:	132.8
Width	:	48.7
Thickness	:	16.7