## Make: INFINITI

## Model: EX35

## Part Number: ADB32768

## Vehicle Manufacturing/Engine:

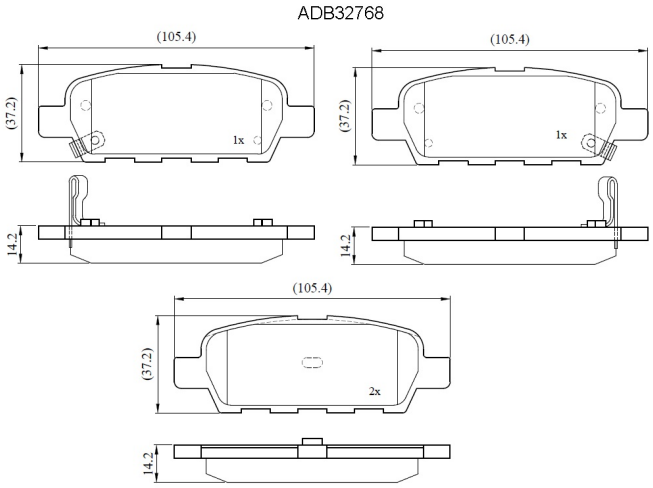


### Specifications

| | | |
|---|---|---|
| **Fitting Position** | : | Rear |
| **Model Date** | : | 10-Nov |
| **Or. Caliper** | : | |

| | | |
|---|---|---|
| **WVA** | : | |
| **FMSI** | : | 7784-D905 |
| **Length** | : | 105.4 |
| **Width** | : | 37.2 |
| **Thickness** | : | 14.2 |