Make: IVECO

Model: Daily->90

Part Number: ADB11047

Vehicle Manufacturing/Engine:

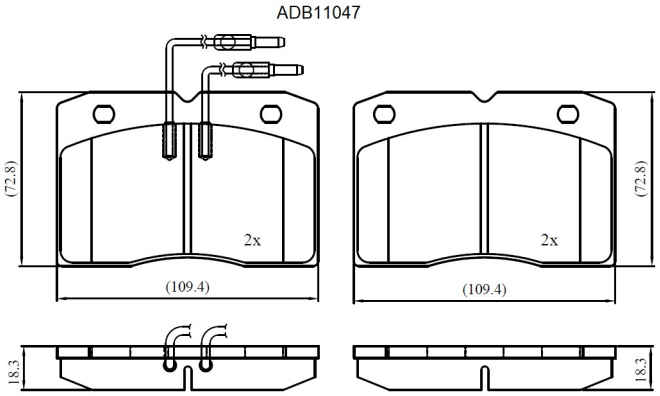

Specifications

Fitting Position	:	Front
Model Date	:	01/82-01/86
Or. Caliper	:	Brembo
WVA	:	21049
FMSI	:	

Length	:	109.4
Width	:	72.8
Thickness	:	18.3