Make: IVECO

Model: Daily->90

Part Number: ADB11051

Vehicle Manufacturing/Engine:

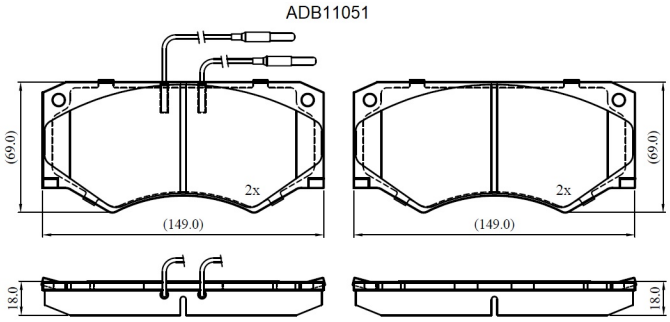

Specifications

Fitting Position	:	Front
Model Date	:	01/85-01/89
Or. Caliper	:	Wabco
WVA	:	21006
FMSI	:	
Length	:	149

Width	:	69
Thickness	:	18