## Make: IVECO

## Model: Daily->90

## Part Number: ADB11054

## Vehicle Manufacturing/Engine:

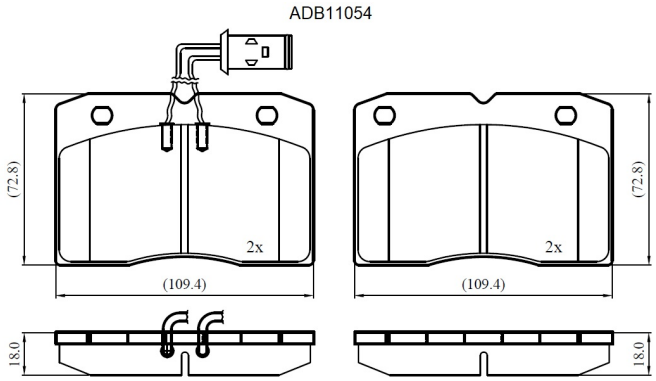


### Specifications

| | | |
|---|---|---|
| **Fitting Position** | : | Front |
| **Model Date** | : | 01/86-01/90 |
| **Or. Caliper** | : | Brembo |
| **WVA** | : | 21188 |
| **FMSI** | : | |

| | | |
|---|---|---|
| **Length** | : | 109.4 |
| **Width** | : | 72.8 |
| **Thickness** | : | 18.3 |