Make: IVECO

Model: Daily III

Part Number: ADB01727

Vehicle Manufacturing/Engine:

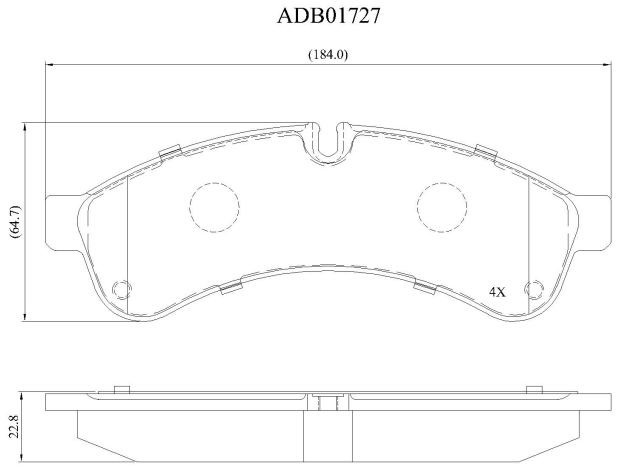

Specifications

Fitting Position	:	Rear
Model Date	:	05/06->
Or. Caliper	:	Brembo

WVA	:	29231
FMSI	:	
Length	:	184
Width	:	64.7
Thickness	:	22.8