Make: IVECO

Model: DAILY VI Platform/Chassis

Part Number: ADB03269

Vehicle Manufacturing/Engine:

ADB03269

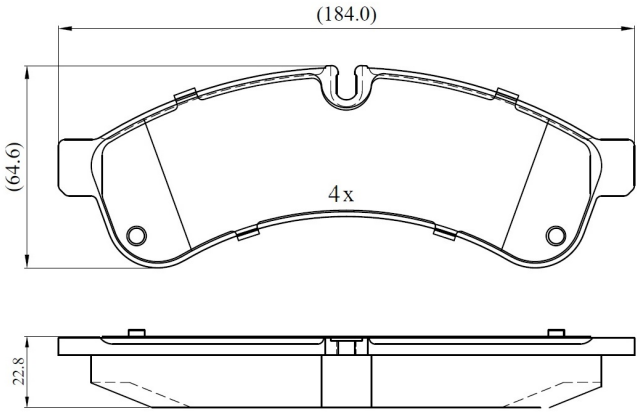

Specifications

Fitting Position	:	Rear
Model Date	:	2014-
Or. Caliper	:	

WVA	:	29231
FMSI	:	
Length	:	184
Width	:	64.6
Thickness	:	22.8