Make: JAGUAR

Model: XJ

Part Number: ADB02289

Vehicle Manufacturing/Engine:

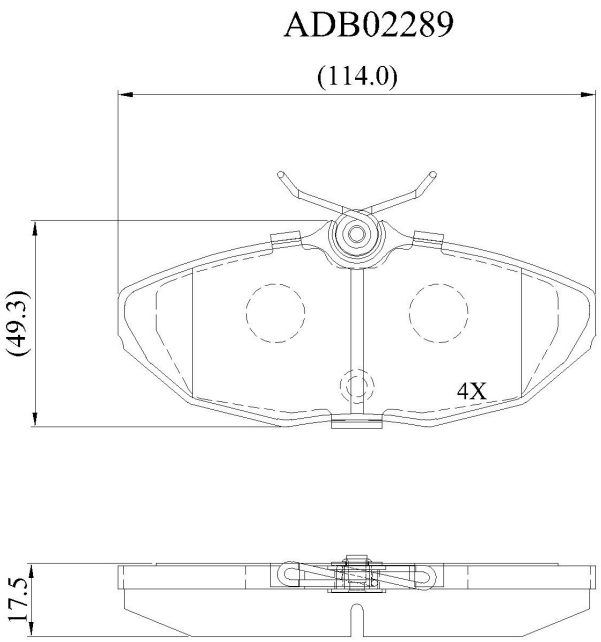

Specifications

Fitting Position	:	Rear

Model Date	:	05/2003->03/2009
Or. Caliper	:	
WVA	:	24190
FMSI	:	
Length	:	114.3
Width	:	49.5
Thickness	:	17.5