Make: JAGUAR/DAIMLER

Model: Jagur XJRS

Part Number: ADB01101

Vehicle Manufacturing/Engine:

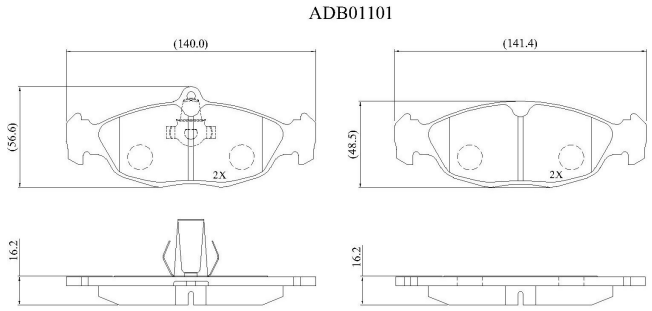

Specifications

Fitting Position	:	Rear
Model Date	:	10/91-01/94
Or. Caliper	:	Ate
WVA	:	20547
FMSI	:	
Length	:	141.4/140.0

Width	:	46.5
Thickness	:	16.2