Make: JEEP

Model: Cherokee -> 97

Part Number: ADB0845

Vehicle Manufacturing/Engine:

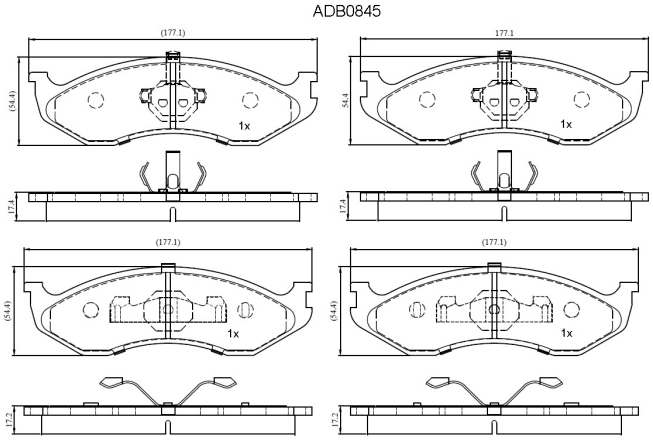

Specifications

Fitting Position	:	Front
Model Date	:	09/89-01/97
Or. Caliper	:	K-Hayes
WVA	:	21822

FMSI	:	
Length	:	177.1
Width	:	54.4
Thickness	:	17.2