Make: JEEP

Model: COMMANDER (XK)

Part Number: ADB36028

Vehicle Manufacturing/Engine:

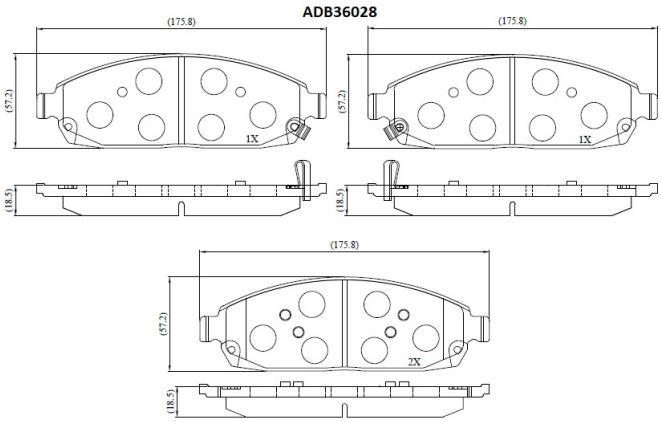

Specifications

Fitting Position	:	Front
Model Date	:	04/06-11/07
Or. Caliper	:	
WVA	:	24250
FMSI	:	

Length	:	175.8
Width	:	57.2
Thickness	:	18.5