Make: JEEP

Model: Compass

Part Number: ADB33282

Vehicle Manufacturing/Engine:

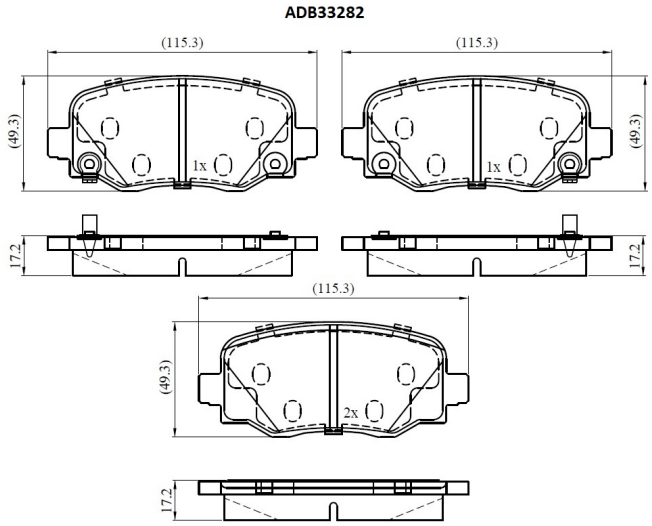

Specifications

Fitting Position	:	Rear
Model Date	:	2020-
Or. Caliper	:	

WVA	:	22304
FMSI	:	
Length	:	115.3
Width	:	49.3
Thickness	:	17.2