## Make: JEEP

## Model: RENEGADE SUV

## Part Number: ADB33282

## Vehicle Manufacturing/Engine:

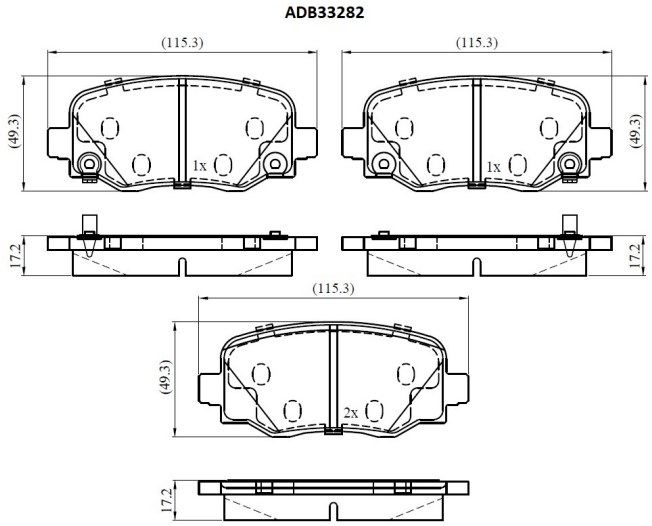


### Specifications

| | | |
|---|---|---|
| **Fitting Position** | : | Rear |
| **Model Date** | : | 2014- |
| **Or. Caliper** | : | |

| | | |
|---|---|---|
| **WVA** | : | 22304 |
| **FMSI** | : | |
| **Length** | : | 115.3 |
| **Width** | : | 49.3 |
| **Thickness** | : | 17.2 |