Make: KIA

Model: CADENZA

Part Number: ADB32153

Vehicle Manufacturing/Engine:

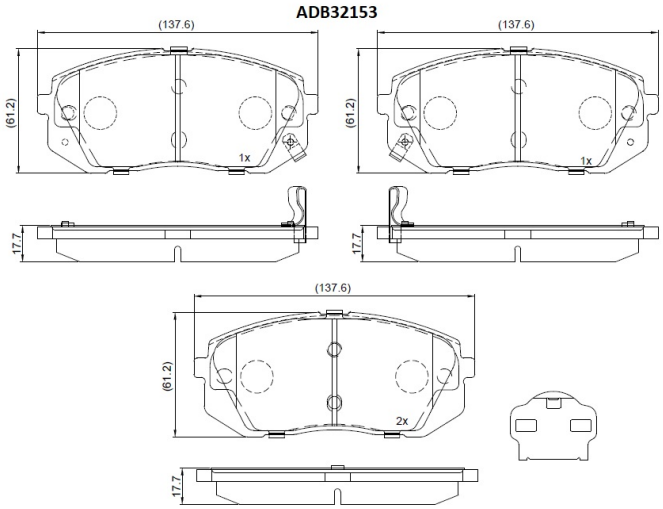

Specifications

Fitting Position	:	Front
Model Date	:	01/10-
Or. Caliper	:	Mando

WVA	:	24501, 25205,25206
FMSI	:	
Length	:	137.6
Width	:	61.2
Thickness	:	17.7