## Make: KIA

## Model: CEE'D

## Part Number: ADB32161

## Vehicle Manufacturing/Engine:

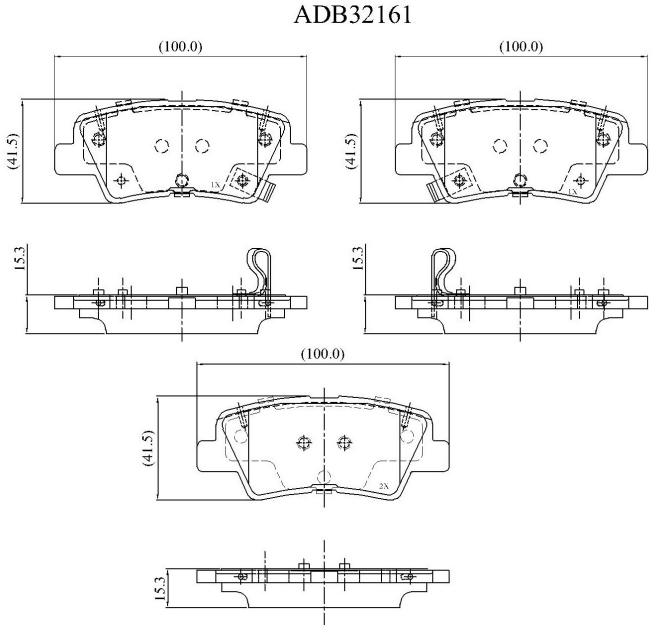


### Specifications

| | | |
|---|---|---|
| **Fitting Position** | : | Rear |

| | | |
|---|---|---|
| **Model Date** | : | 05/12- |
| **Or. Caliper** | : | Akebono |
| **WVA** | : | 2,49,34,24,93,52,49,36,00,00,00,00,00,00,000 |
| **FMSI** | : | |
| **Length** | : | 99.8 |
| **Width** | : | 41 |
| **Thickness** | : | 15.3 |