## Make: KIA

## Model: Magentis

## Part Number: ADB31776

## Vehicle Manufacturing/Engine:

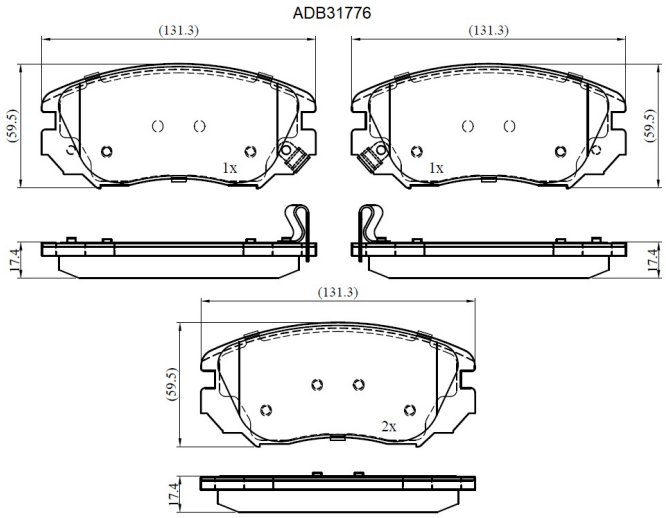


### Specifications

| | | |
|---|---|---|
| **Fitting Position** | : | Front |
| **Model Date** | : | 11/05--> |
| **Or. Caliper** | : | Mando |

| | | |
|---|---|---|
| **WVA** | : | 23891 |
| **FMSI** | : | |
| **Length** | : | 131.3 |
| **Width** | : | 59.5 |
| **Thickness** | : | 17.4 |