Make: KIA

Model: Magentis

Part Number: ADB31776

Vehicle Manufacturing/Engine:

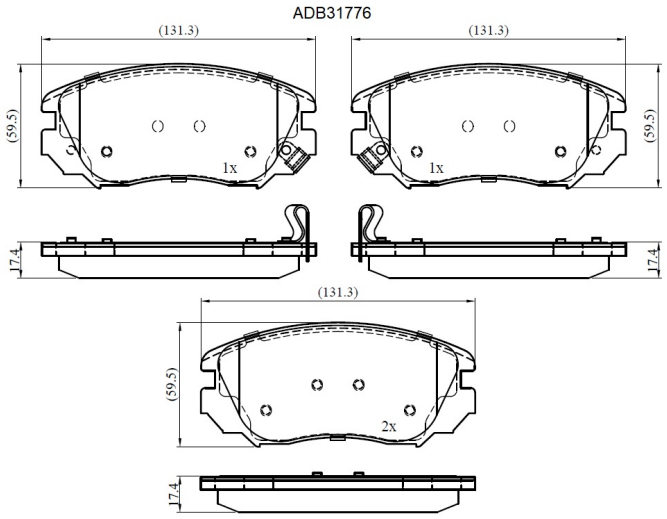

Specifications

Fitting Position	:	Front
Model Date	:	04/06-->
Or. Caliper	:	Mando

WVA	:	23891
FMSI	:	
Length	:	131.3
Width	:	59.5
Thickness	:	17.4