Make: KIA

Model: Magentis

Part Number: ADB32752

Vehicle Manufacturing/Engine:

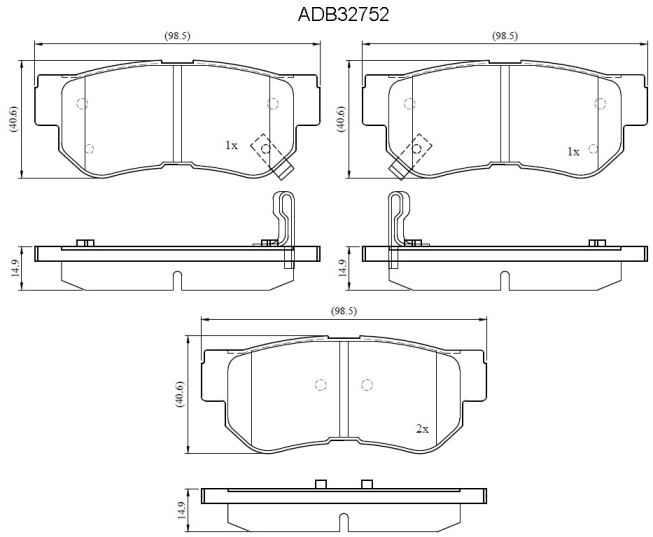

Specifications

Fitting Position	:	Rear
Model Date	:	09-
Or. Caliper	:	

WVA	:	
FMSI	:	7688-D813
Length	:	98.5
Width	:	40.6
Thickness	:	14.9