Make: KIA

Model: OPTIMA Sportswagon

Part Number: ADB33190

Vehicle Manufacturing/Engine:

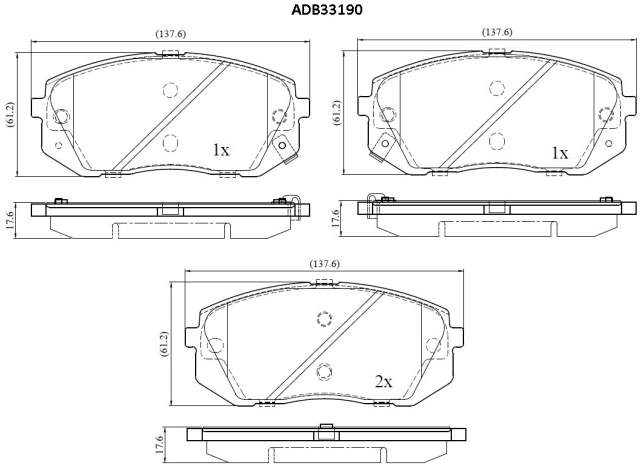

Specifications

Fitting Position	:	Front
Model Date	:	2016-
Or. Caliper	:	

WVA	:	25205
FMSI	:	
Length	:	137.6
Width	:	61.2
Thickness	:	17.6