Make: KIA

Model: PICANTO III

Part Number: ADB32526

Vehicle Manufacturing/Engine:

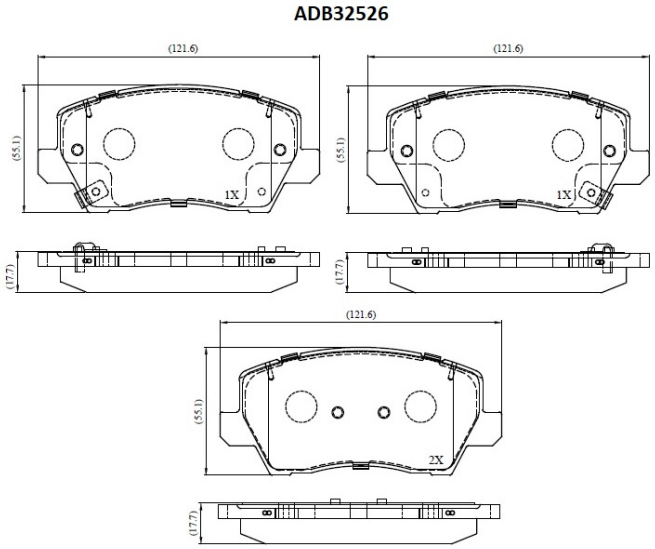

Specifications

Fitting Position	:	Front
Model Date	:	2017-

Or. Caliper	:	
WVA	:	22,90,42,29,05,22,906
FMSI	:	
Length	:	121.65
Width	:	54.8
Thickness	:	17.7,18.1