Make: KIA

Model: PRO CEE'D

Part Number: ADB33190

Vehicle Manufacturing/Engine:

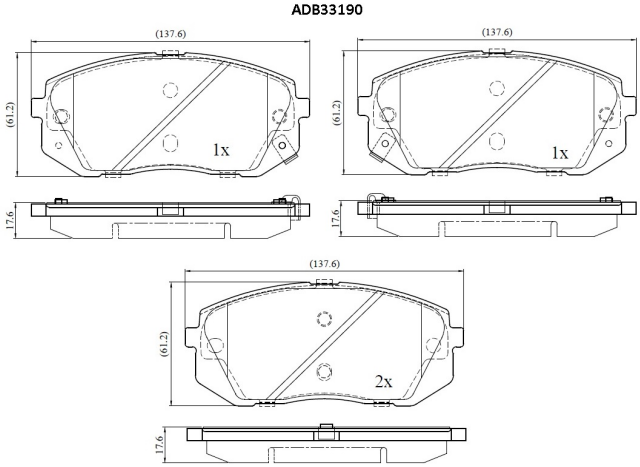

Specifications

Fitting Position	:	Front
Model Date	:	2013-2018
Or. Caliper	:	

WVA	:	25205
FMSI	:	
Length	:	137.6
Width	:	61.2
Thickness	:	17.6