Make: KIA

Model: RIO II

Part Number: ADB31519

Vehicle Manufacturing/Engine:

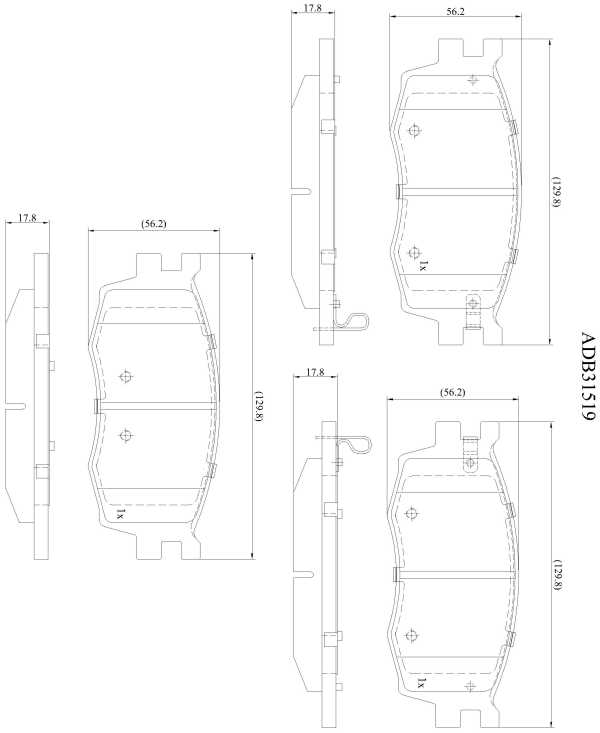

Specifications

Fitting Position	:	Front
Model Date	:	03/05-->
Or. Caliper	:	Mando
WVA	:	24,31,72,43,18,24,319
FMSI	:	
Length	:	129.8
Width	:	56.2
Thickness	:	17.8