Make: KIA

Model: Rio III

Part Number: ADB32040

Vehicle Manufacturing/Engine:

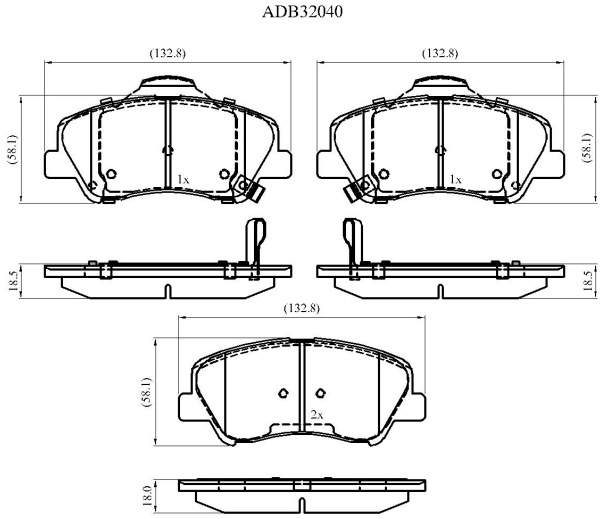

Specifications

Fitting Position	:	Front
Model Date	:	09/11-
Or. Caliper	:	Mando

WVA	:	25348, 25349, 25350
FMSI	:	
Length	:	132.8
Width	:	58.1
Thickness	:	18