Make: KIA

Model: Rio III

Part Number: ADB32161

Vehicle Manufacturing/Engine:

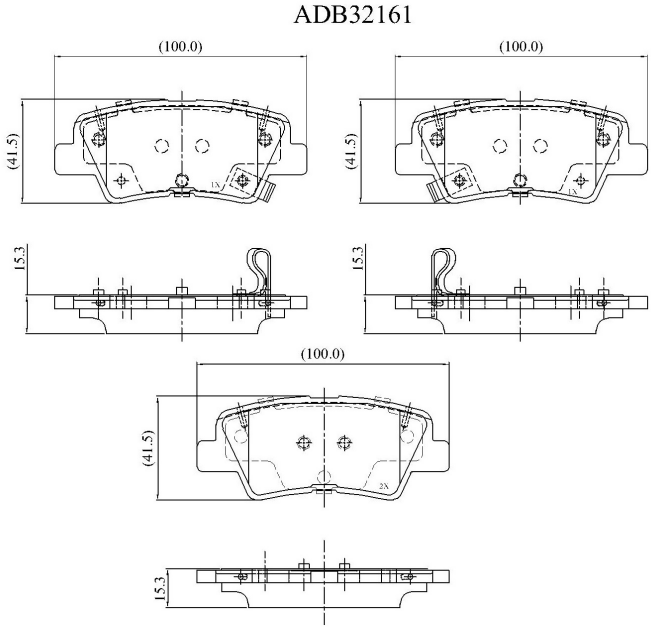

Specifications

Fitting Position	:	Rear

Model Date	:	06/12-
Or. Caliper	:	Akebono
WVA	:	2,49,34,24,93,52,49,36,00,00,00,00,00,00,000
FMSI	:	
Length	:	99.8
Width	:	41
Thickness	:	15.3