Make: KIA

Model: Rio

Part Number: ADB32588

Vehicle Manufacturing/Engine:

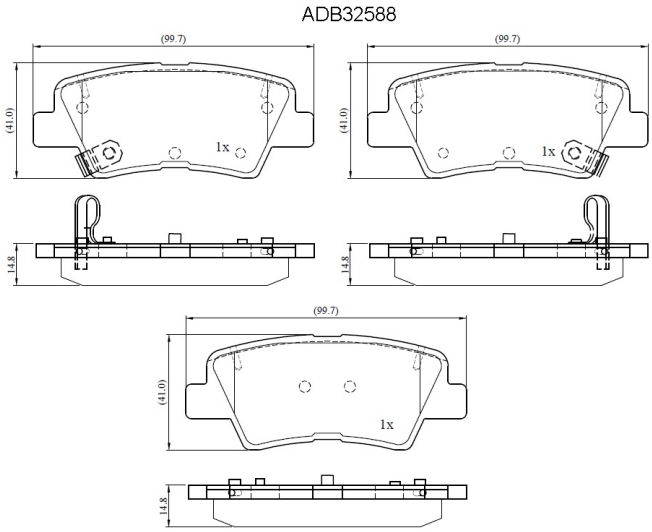

Specifications

Fitting Position	:	Rear
Model Date	:	Dec-13
Or. Caliper	:	

WVA	:	
FMSI	:	D1544
Length	:	100
Width	:	41.5
Thickness	:	14.8