Make: KIA

Model: SORENTO III

Part Number: ADB32693

Vehicle Manufacturing/Engine:

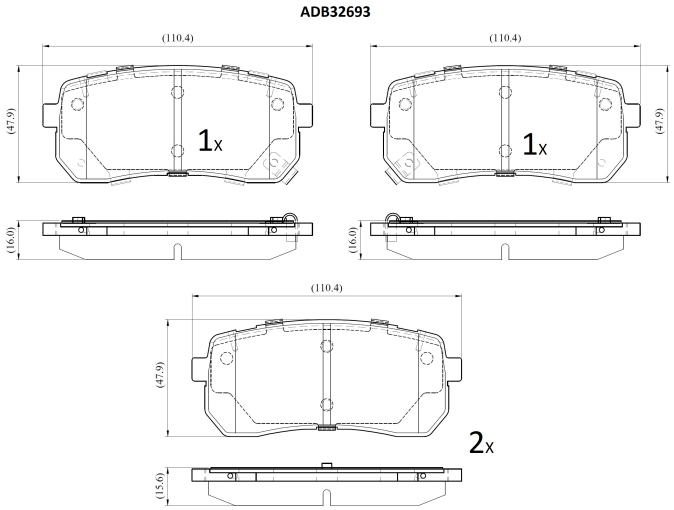

Specifications

Fitting Position	:	Rear
Model Date	:	2015-
Or. Caliper	:	

WVA	:	24599.246
FMSI	:	
Length	:	110.3
Width	:	47.8
Thickness	:	15.5