## Make: KIA

## Model: SORENTO III

## Part Number: ADB33256

## Vehicle Manufacturing/Engine:

**ADB33256**

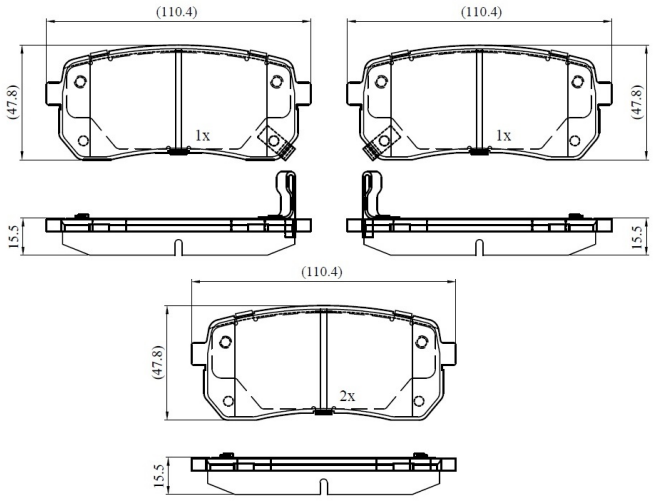


### Specifications

| | | |
|---|---|---|
| **Fitting Position** | : | Rear |
| **Model Date** | : | 2015- |

| | | |
|---|---|---|
| **Or. Caliper** | : | |
| **WVA** | : | 24599 |
| **FMSI** | : | |
| **Length** | : | 110.4 |
| **Width** | : | 47.8 |
| **Thickness** | : | 15.5 |