Make: KIA

Model: SORENTO III

Part Number: ADB33256

Vehicle Manufacturing/Engine:

ADB33256

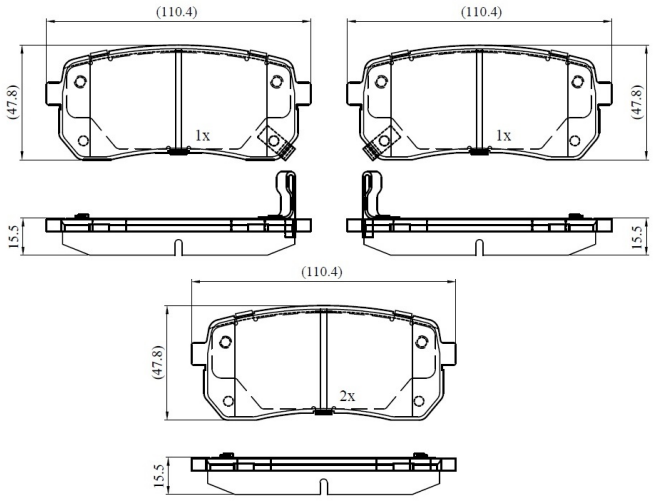

Specifications

Fitting Position	:	Rear
Model Date	:	2015-

Or. Caliper	:	
WVA	:	24599
FMSI	:	
Length	:	110.4
Width	:	47.8
Thickness	:	15.5