Make: KIA

Model: SOUL II

Part Number: ADB32529

Vehicle Manufacturing/Engine:

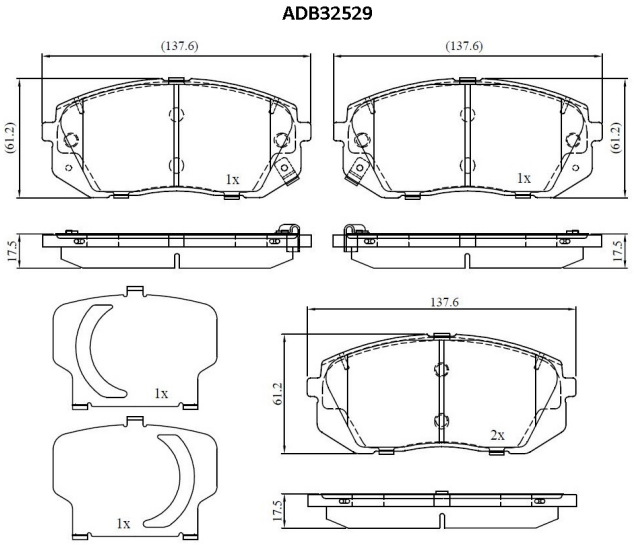

Specifications

Fitting Position	:	Front
Model Date	:	2014-

Or. Caliper	:	
WVA	:	24501
FMSI	:	
Length	:	137.8
Width	:	61
Thickness	:	17.6