Make: KIA

Model: VENGA

Part Number: ADB36047

Vehicle Manufacturing/Engine:

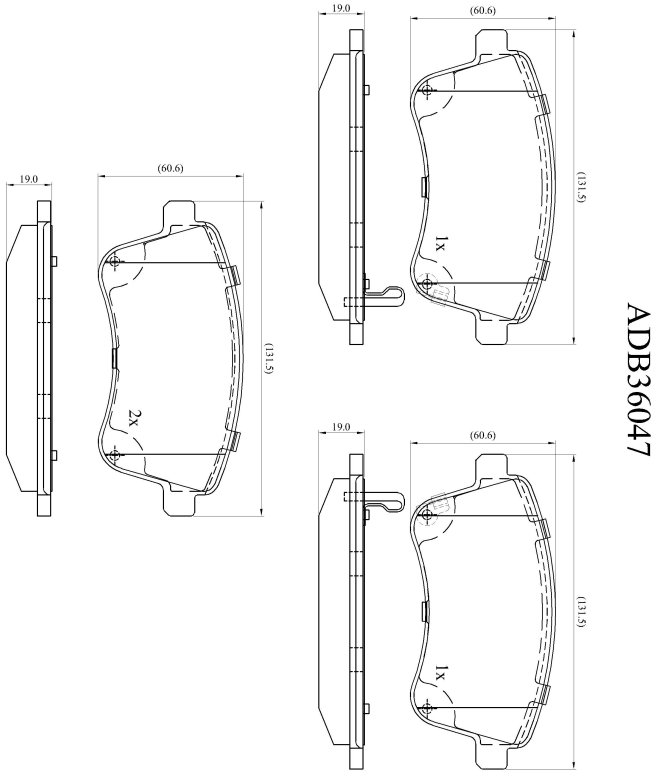

Specifications

Fitting Position	:	Front
Model Date	:	02/10-
Or. Caliper	:	TRW
WVA	:	25184, 25185,25186
FMSI	:	
Length	:	131.6
Width	:	60.7
Thickness	:	19