Make: LANCIA

Model: Dedra

Part Number: ADB1142

Vehicle Manufacturing/Engine:

ALLIED NIPPON PRIVATE LIMITED
(Formerly known as Allied Nippon Ltd.)
CIN : U34300DL1988PTC030910

ADB1142

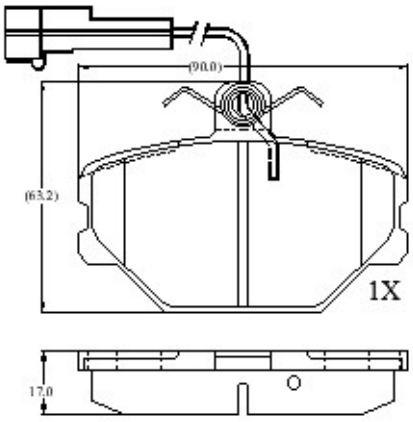

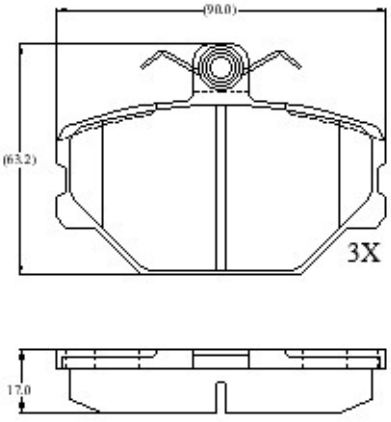

Specifications

Fitting Position	:	Front
Model Date	:	03/89-01/95
Or. Caliper	:	Locus
WVA	:	21101
FMSI	:	
Length	:	90
Width	:	63.2
Thickness	:	17