Make: LANCIA

Model: Dedra

Part Number: ADB1477

Vehicle Manufacturing/Engine:

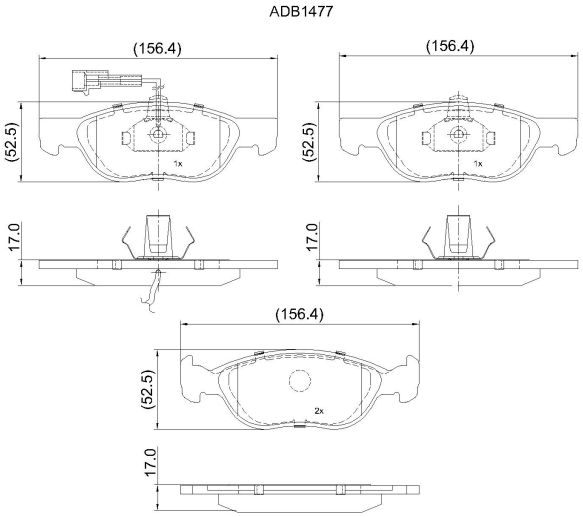

Specifications

Fitting Position	:	Front
Model Date	:	01/95->
Or. Caliper	:	Ate

WVA	:	21927
FMSI	:	
Length	:	156.4
Width	:	52.5
Thickness	:	17