ALLIED NIPPON PRIVATE LIMITED
(Formerly known as Allied Nippon Ltd.)
CIN : U34300DL1988PTC030910

Make: LANCIA

Model: Dedra

Part Number: ADB1479

Vehicle Manufacturing/Engine:

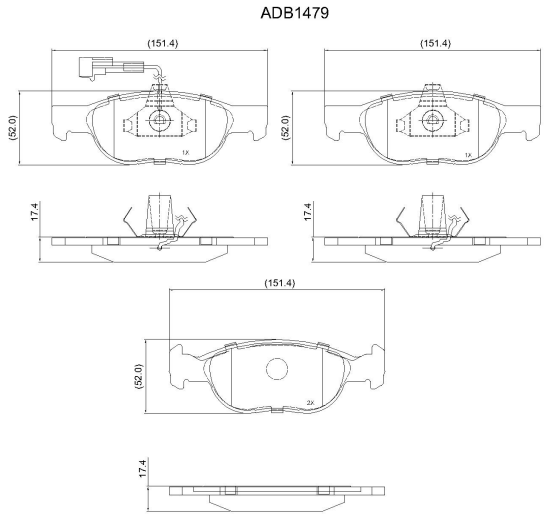

Specifications

Fitting Position	:	Front
Model Date	:	01/95->
Or. Caliper	:	Ate

WVA	:	21930
FMSI	:	
Length	:	151.4
Width	:	52
Thickness	:	17.4