**Make: LANCIA**

**Model: Delta**

**Part Number: ADB0140**

**Vehicle Manufacturing/Engine:**

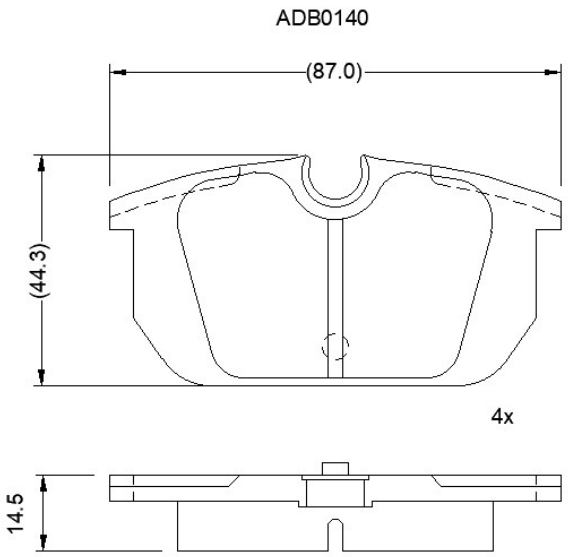


**Specifications**

| | | |
|---|---|---|
| **Fitting Position** | : | Rear |

| | | |
|---|---|---|
| **Model Date** | : | 01/93-> |
| **Or. Caliper** | : | Locus |
| **WVA** | : | 21103 |
| **FMSI** | : | |
| **Length** | : | 87 |
| **Width** | : | 44.4 |
| **Thickness** | : | 14.5 |