Make: LANDROVER

Model: Discovery (->10/99)

Part Number: ADB0162

Vehicle Manufacturing/Engine:

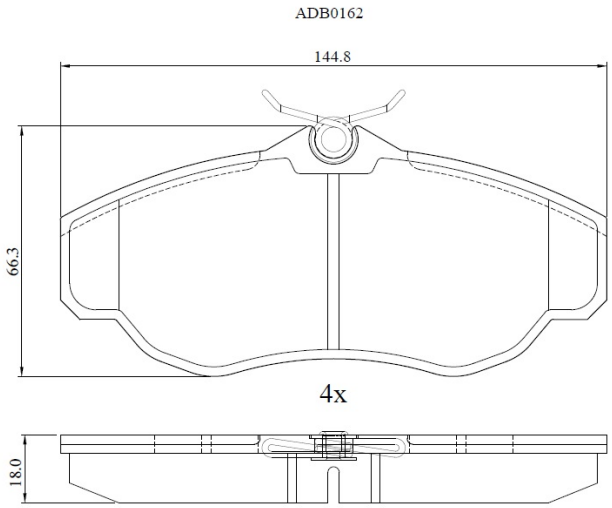

Specifications

Fitting Position	:	Front
Model Date	:	10/99->
Or. Caliper	:	Lucas

WVA	:	23452
FMSI	:	
Length	:	144.8
Width	:	66.3
Thickness	:	18