Make: LANDROVER

Model: Freelander (->10/00)

Part Number: ADB0873

Vehicle Manufacturing/Engine:

ADB0873

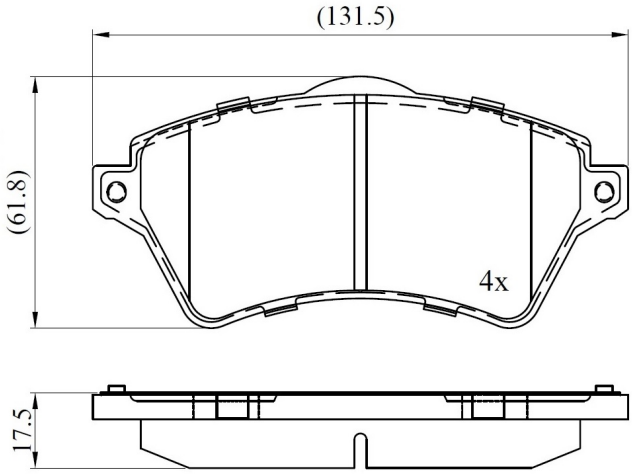

Specifications

Fitting Position	:	Front
Model Date	:	10/00->

Or. Caliper	:	Lucas
WVA	:	23615
FMSI	:	
Length	:	131.5
Width	:	61.8
Thickness	:	17.5