Make: LEXUS

Model: RX

Part Number: ADB03289

Vehicle Manufacturing/Engine:

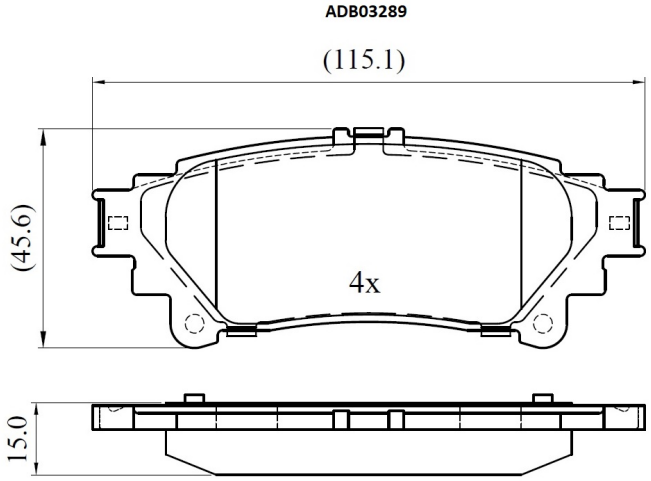

Specifications

Fitting Position	:	Rear
Model Date	:	2008-2015
Or. Caliper	:	

WVA	:	24918
FMSI	:	
Length	:	115.1
Width	:	45.6
Thickness	:	15