Make: MAHINDRA

Model: Supro

Part Number: ADB02357

Vehicle Manufacturing/Engine:

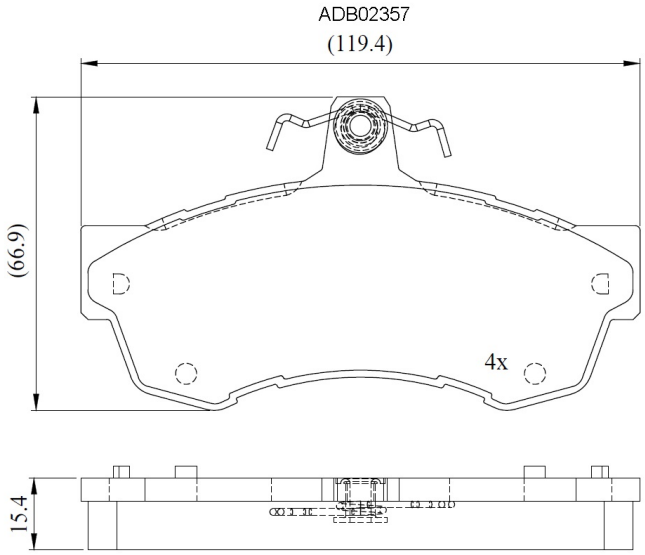

Specifications

Fitting Position	:	Front
Model Date	:	2015-

Or. Caliper	:	
WVA	:	
FMSI	:	
Length	:	119.4
Width	:	66.9
Thickness	:	15.4