Make: MAZDA

Model: 323, 323F (BA Series)

Part Number: ADB3822

Vehicle Manufacturing/Engine:

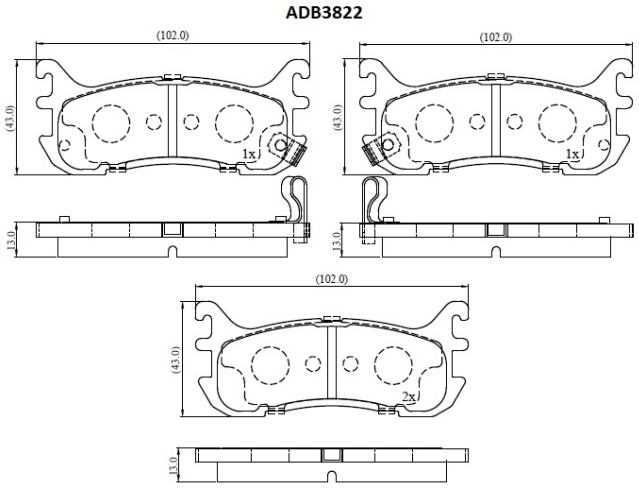

Specifications

Fitting Position	:	Rear
Model Date	:	06/94-10/98
Or. Caliper	:	Akebono

WVA	:	23387
FMSI	:	
Length	:	102
Width	:	44
Thickness	:	13