Make: MAZDA

Model: CX-30

Part Number: ADB33234

Vehicle Manufacturing/Engine:

ADB33234

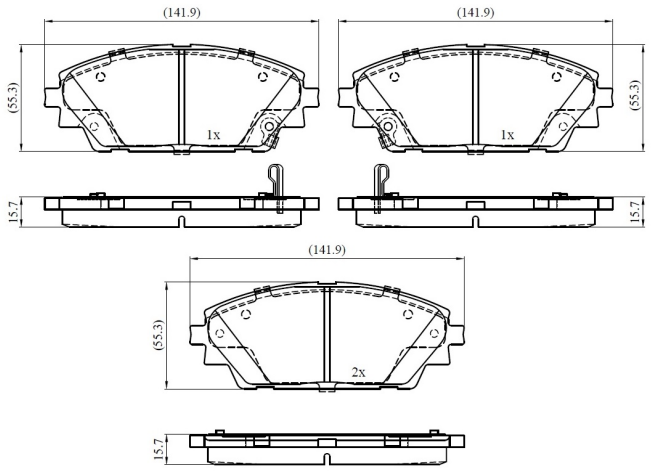

Specifications

Fitting Position	:	Front
Model Date	:	2019-
Or. Caliper	:	

WVA	:	25875
FMSI	:	
Length	:	141.9
Width	:	55.3
Thickness	:	15.7