Make: MEGA

Model: CLUB II

Part Number: ADB2416

Vehicle Manufacturing/Engine:

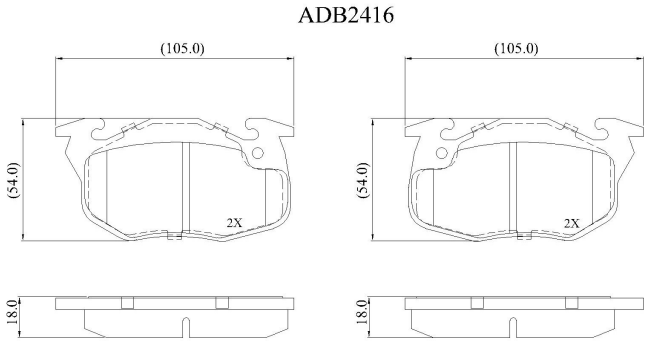

Specifications

Fitting Position	:	Front
Model Date	:	1999-
Or. Caliper	:	
WVA	:	2,10,61,20,906
FMSI	:	

Length	:	105
Width	:	54
Thickness	:	18