Make: MERCEDES-BENZ

Model: A-CLASS Saloon

Part Number: ADB02862

Vehicle Manufacturing/Engine:

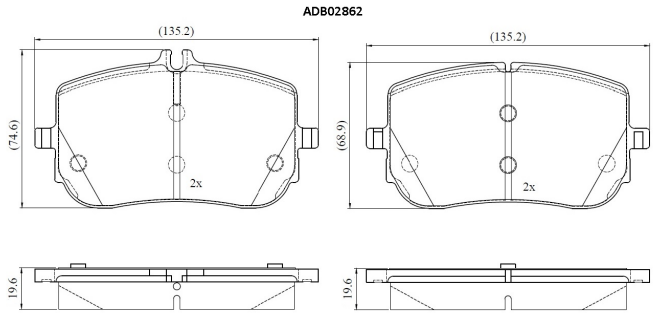

Specifications

Fitting Position	:	Front
Model Date	:	2019-
Or. Caliper	:	
WVA	:	2,29,42,22,943
FMSI	:	
Length	:	135.4

Width	:	68.9,74.4
Thickness	:	19.3