Make: MERCEDES-BENZ

Model: A-CLASS

Part Number: ADB02765

Vehicle Manufacturing/Engine:

ADB02765

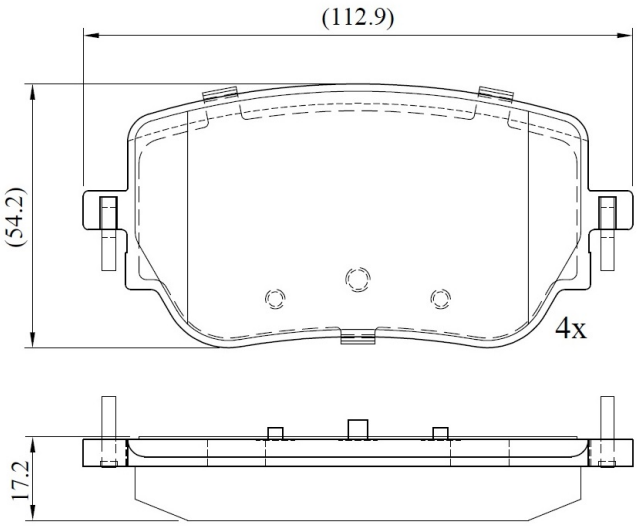

Specifications

Fitting Position	:	Rear
Model Date	:	2019-

Or. Caliper	:	
WVA	:	22987
FMSI	:	
Length	:	113.7
Width	:	54.2
Thickness	:	17.2