Make: MERCEDES-BENZ

Model: A-CLASS

Part Number: ADB32961

Vehicle Manufacturing/Engine:

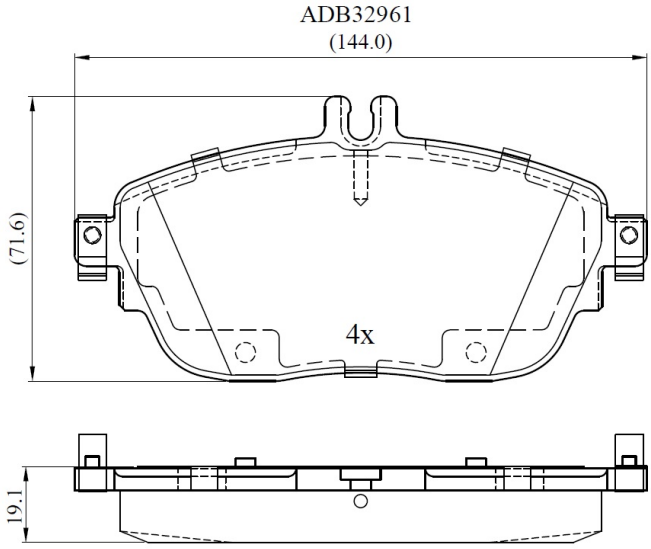

Specifications

Fitting Position	:	Front
Model Date	:	2014-2018
Or. Caliper	:	

WVA	:	24869
FMSI	:	
Length	:	
Width	:	
Thickness	:	